英格爾科技股份有限公司

ENG ELECTRIC CO., LTD.

Revision 01

Approval Sheet

CUSTOMER: AF55A

CUSTOMER MODEL NO.:

ENG MODEL NO.: 6A-051WU05

ENG PART NO.: 6A-051WU05-024

DESCRIPTION: Switching Power Supply

DATE: 2016/3/8

DESIGNED	CHECKED	APPROVED
工程部 2016.03.08 徐鵬	工程部課長 2016.03.08 劉輕舟	工程部課長 2016.03.08 劉輕舟

APPROVAL DATE:

CUSTOMER APPROVAL		

總部：台灣桃園縣龜山鄉民生北路1段536號5樓

Head Office: 5F,No.536, Sec.1, Minsheng N.Rd,Kweishan Hsiang,Taoyuan County,Taiwan

TEL: 886-3-2121133 / FAX: 886-3-2121561

工廠：深圳市寶安區福永街道白石廈東區淇譽路180號中核集團工業區A棟

Factory: Block A, Nuclear Group Industrial Dist
No.180,Qiyu Road,Baishixia,Fuyong Street,Bao
Shenzhen, CHINA
TEL:+ 86-755-27299155
FAX: +86-755-81443663

工廠：深圳市寶安區福永街道白石廈東區淇譽路180號中核集團工業區B棟

Factory: Block B, Nuclear Group Industrial District,
No.180,Qiyu Road,Baishixia,Fuyong Street,Bao'an,
Shenzhen, CHINA
TEL:+ 86-755-27307512
FAX: +86-755-27308049

ENG ELECTRIC CO., LTD.

CONTENT

NO.	DESCRIPTION
1	Product characteristics
1 .1	General description
1 .2	Electrical characteristics
1 .3	Mechanical characteristics
2	Attachment
(Att. 1)	Label
(Att. 2)	Outdrawing
(Att. 3)	Package
(Att. 3.1)	Package flow chart
(Att. 4)	DC cord drawing

ENG ELECTRIC CO., LTD.

HISTORY(6A-051WU05-024)

NO.	DATE	REVISION	REMARK	SIGN

ENG products are being reviewed and improved continuously. Based on the same quality andspecification, ENG reserves the right to make changes (e.g. material change, add material supplier) without prior notice.

ENG ELECTRIC CO., LTD.

1. Product characteristics

1.1 General Description

Model 6A-051WU05 is an universal switching-mode power supply, operating at input voltage 90VAC to 264VAC and output voltage of 5VDC with 1.0A DC load

1.2 Electric Characteristics

1.2.1 Input

No	ITEM	SPECIFICATION
1.	Input Voltage Rated	AC100V-240V
	Input Voltage Range	AC90V-264V
2.	Frequency Rated	50-60Hz
	Frequency Range	47-63Hz
3.	Input Current Rated	300mA RMS Max
	Inrush Current	No damage on power supply when switchingit on/off repeatedly under any condition
4.	Leakage current	0.25mA
5	Average Efficiency	73.62% Min (CEC & DOE LEVEL VI Compliant) 73.77% Min (ErP Tier2 Compliant)
6.	Input Power(no load)	<0.1W (CEC & DOE LEVEL VI Compliant) <0.075W (ErP Tier2 Compliant)

1.2.2: Output:

No	ITEM	SPECIFICATION	
1.	output Voltage	5VDC	
2.	output max. current	1.0A	
3.	output min. Current	0A	
4.	Line regulation	± 1%	
5.	Output voltage range(No Load)	4.75~6.0V	
6.	Output voltage range(Full Load)	4.75~5.25V	
7.	Over voltage protection	Protect through primary circuit IC	
8.	Short circuit protection	Output shut down and Auto restart	
9.	Ripple Voltage	150mV (p-p)	Input :(100V-240VAC)
			Output:full load

Note: *1. Ripple&Noise test: Use 20MHz band width frequency oscilloscope.Add 0.1uF/47uF Capacitors at output connector terminal.

1.2.3 HI-POT SPECIFICATION

Input to output : 3000VAC or 4242VDC 10mA 1 minute.

1.2.4 Insulation resistance:

Input to output: 500Vdc to test the input to output resistance not be less 100M Ohm

1.2.5 Safety approved:

Type(Marking)	Country/Region	Standard
UL/CUL	USA/Canda	Safety : UL 60950-1
		Safety : CSA C22.2 No 60950-1-07
FCC	USA	EMI : FCC Part 15, SubpartB , Class B

1.2.6 PB-free standard：RoHS Compliant

1.3 Mechanical characteristics

1.3.1 AC Plug: INLET Type:UL

1.3.2 DC cord:

(1) Bending test: Life 1000 times 100% guarantee. Swings 120 from Left to right loading weight 200g , 40 cycle/minute.

(2) Pull test : DC cord and plug ,weight 6kg for 1 minute.

1.3.3 Cord length and output plug: See Reference Att.4

1.3.4 Weight : _____ g

1.3.5 Case Size: (L)54.2 X (W)32.7X (H)30.5mm

1.3.6 Normal operating temperature and humidity

1.3.7 Temperature

Operating: 0℃ to 40℃

Storage : -10℃ to 70℃

1.3.8 Humidity

Operating : 20% to 80%.

Storage: 10% to 90%

2.Attachment:

(Att.1) Label

(Att.2) Outdrawing

(Att.3) Package

(Att.3.1) Package flow chart

(Att.4) DC cord drawing

Att.1

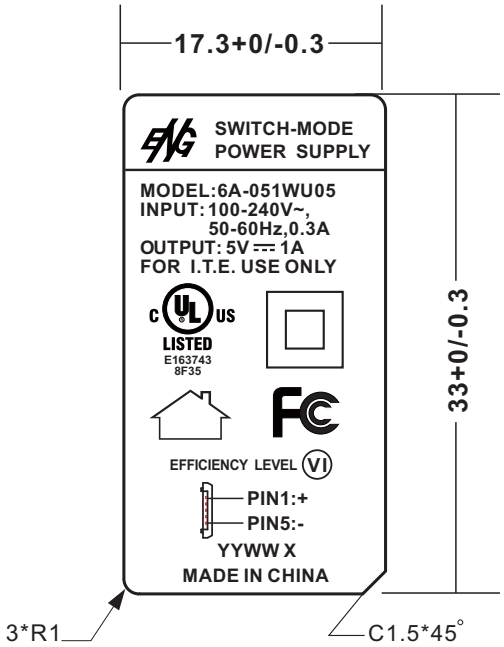

Production note:
生產注意:
1) PDF file is only for content checking while mass production film version is subject referred to CorelDRAW files ;
PDF檔僅爲內容核對用,銘版生產出菲林請用CorelDRAW檔;
2) The manufacturer must ensure the PDF file content of the file drawing No. / version / date / label version are exactly same as CorelDRAW file Drawing.
生產商必需確認PDF檔與CorelDRAW檔圖號/版本/日期/銘版內容完全一致.

UNIT: mm

YYWW X YY:YEAR WW:WEEK X=S or A(S:FU YONG A:DONG GUAN)

ALUMINUM NAMEPLATE: ○ BLACK WORD ON SILVER BASE(銀底黑字)
(鋁板) ○ SILVER WORD ON BLACK BASE(黑底銀字)

METALIZED POLYESTER: ○ BLACK WORD ON SILVER BASE(銀底黑字)
(SILVER MATTE) ● SILVER WORD ON BLACK BASE(黑底銀字)
(消銀龍)

TOLERANCE				

6A-051WU05-024

DESIGNED	CHECKED	APPROVED			TITLE	DATE
工程部 2016.03.08 華利玲	工程部 2016.03.08 徐鵬	工程部課長 2016.03.08 劉輕舟	UNITS	mm	LABEL	
			SCALE	2:1	DRAWING NO. N20-AF55A0-A29	16/03/08
ENG ELECTRIC CO., LTD.					DRAWING NAME 0318	REVISION 01

Att.2

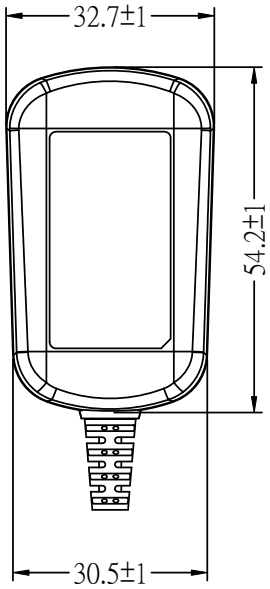

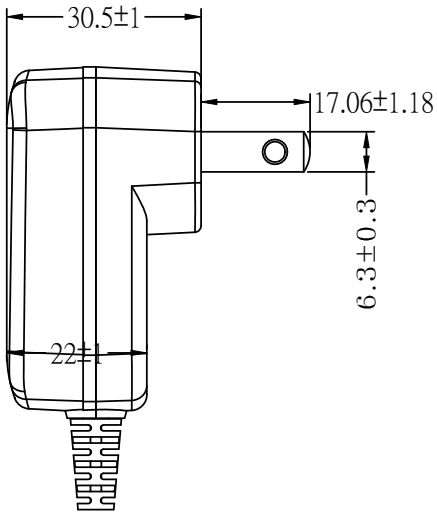

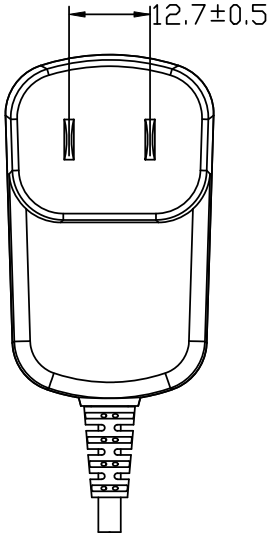

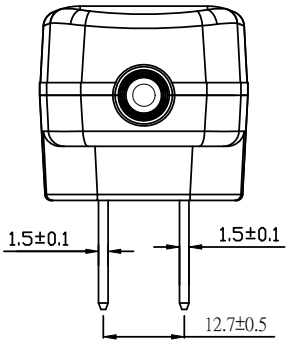

TOLERANCE				

DESIGNED	CHECKED	APPROVED		TITLE	DATE
工程部 2016.03.08 華利玲	工程部 2016.03.08 徐鵬	工程部課長 2016.03.08 劉輕舟	UNITS mm SCALE	OUTDRAWING	
				DRAWING No. 031801-001	14/10/07
ENG ELECTRIC CO., LTD.				DRAWING NAME 031801	REVISION 01

ATT. 3

CARTON MATERIAL:A=B(6mm)
CARTON SIZE:454X395X200mm
紙箱尺寸: 454X395X200mm
Q'TY: 200pcs(40x5)
數量: 200pcs(40x5)

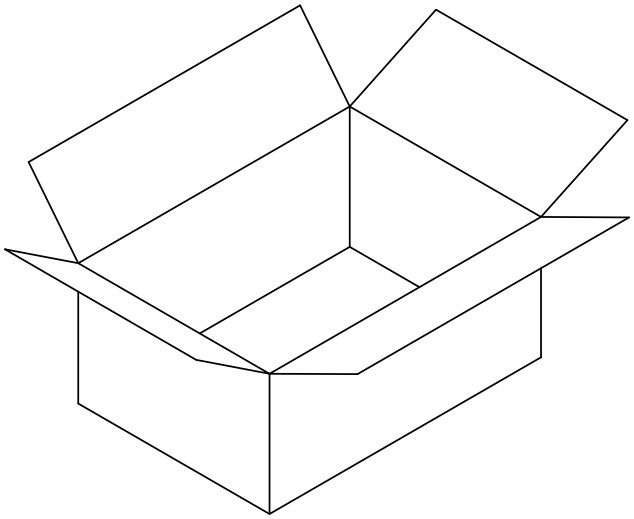

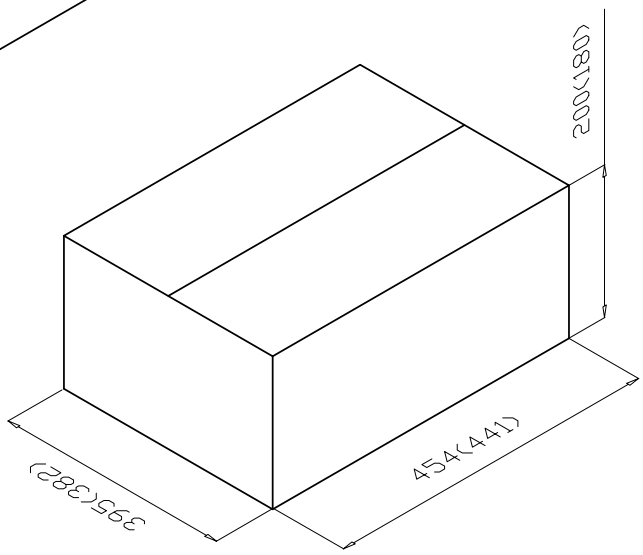

The tolerance of the internal dimensions of the carton is +7/-0
紙箱內度尺寸公差為+7/-0

TOLERANCE				

DESIGNED	CHECKED	APPROVED		TITLE	DATE
工程部 2016.03.08 華利玲	工程部 2016.03.08 徐鵬	工程部課長 2016.03.08 劉輕舟	UNITS mm	PACKAGE	
			SCALE	DRAWING No. PY6-4050-H-50	04/09-13
ENG ELECTRIC CO., LTD.				DRAWING NAME Y6-4050-H-50	REVISION 01

ATT. 3. 1

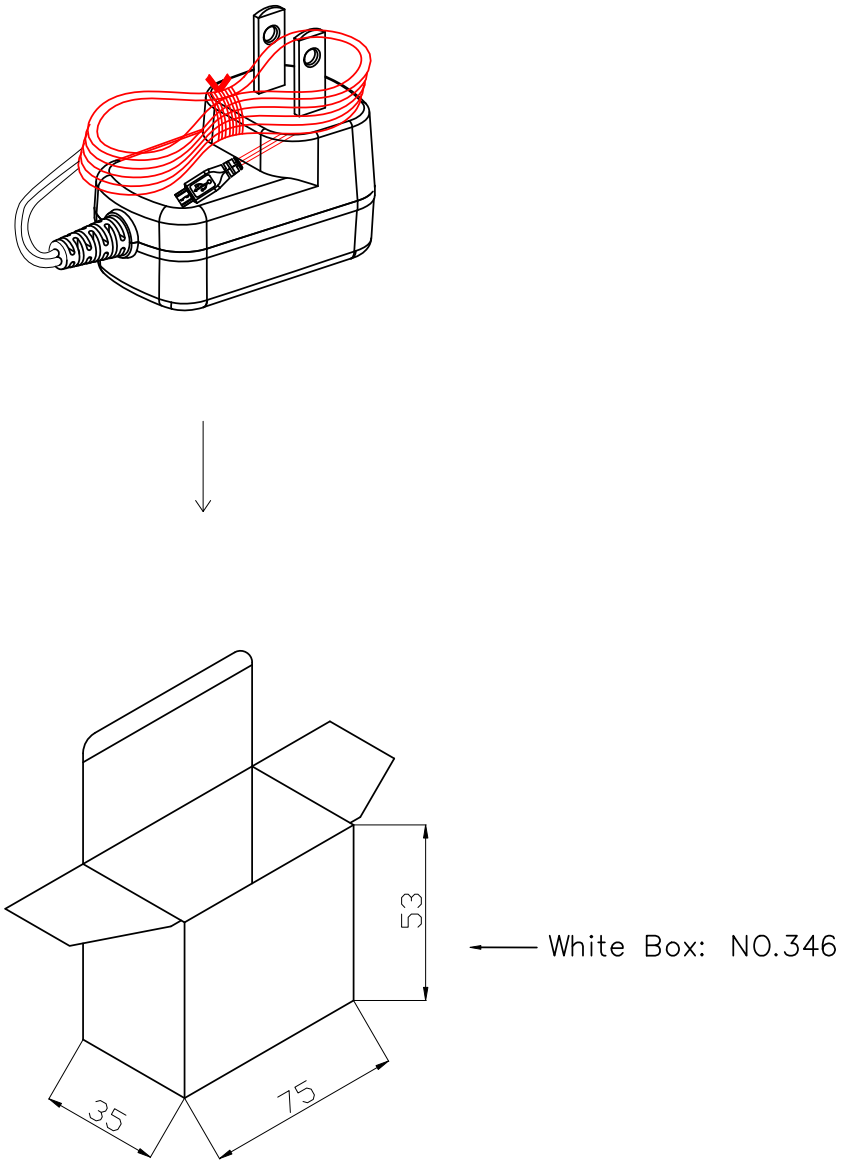

The tolerance of the external dimensions of the white box is ±1
小禮盒外度尺寸公差為±1

TOLERANCE				

DESIGNED	CHECKED	APPROVED		TITLE	DATE
工程部 2016.03.08 華利玲	工程部 2016.03.08 徐鵬	工程部課長 2016.03.08 劉輕舟	UNITS mm	PACKAGE FLOW CHART	
			SCALE	DRAWING No. 6A-051WU05-024	16/03/08
ENG ELECTRIC CO., LTD.				DRAWING NAME 346#	REVISION 01

Att.4

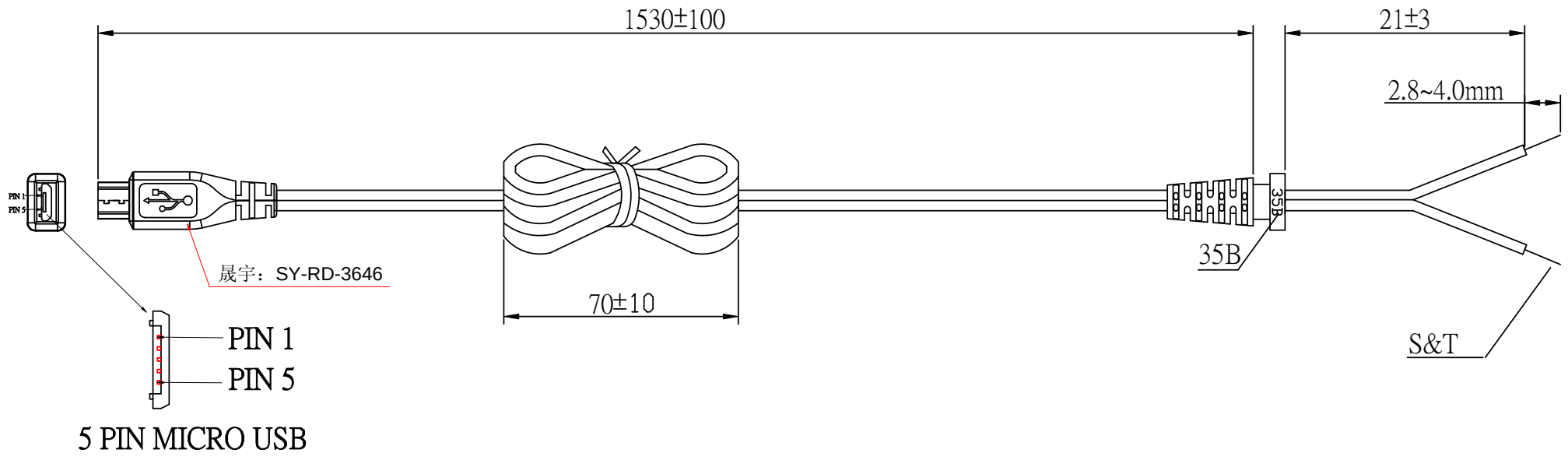

#22AWGX2C UL2468 HAVE ON WORD WIRE IN PIN5, NO WORD WIRE IN PIN1(有字接PIN5，無字接PIN1)

OD: ∅1.7*3.4

TOLERANCE				

Parameter request	
BENDING TEST	a. ±60° b. 吊重200g WEIGHT 200g c. 40回/分 40 ROUND/MINUTE d. 1000次/最少 OVER 1000 COUNT MIN

DESIGNED	CHECKED	APPROVED		TITLE	DATE
工程部 Wen.Li 2016.03.08 華利玲	工程部 XUP 2016.03.08 徐鵬	工程部課長 2016.03.08 劉輕舟	UNITS mm SCALE	DC CORD	
				DRAWING No. 6A-051WU05-024	16/03/08
ENG ELECTRIC CO., LTD.				DRAWING NAME 21-35BXXX-XXX-00	REVISION 01